ALL-WAPC0435AC

Wireless AC Dual Band Access Point PoE

Kurzanleitung

Standardeinstellungen

IP: wird per DHCP vergeben

Wenn kein DHCP vorhanden: 192.168.1.1

User Name: admin

Password: admin

Bitte ändern Sie aus Sicherheitsgründen nach der endgültigen Konfiguration die Standard-Passwörter des Gerätes!

Besuchen Sie unser Downloadportal um aktuelle Firmware / Dokumente / Software zu erhalten:

http://www.allnet.de/downloads.html

Weitere Hilfestellungen finden Sie auch online in unserem Service Portal:

http://service.allnet.de/

© ALLNET GmbH München 2015 - Alle Rechte vorbehalten

Verpackungsinhalt

Bitte überprüfen Sie den Inhalt der Verpackung, bevor Sie mit der Inbetriebnahme des ALL-WAPC0435AC fortfahren.

- ALL-WAPC0435AC Access Point
- 12V/2A 100V~240V Netzteil
- RJ-45 Ethernet Kabel
- Montagewinkel
- Wand/Decken Montage Kit
- T- Schienen Montage KitT-Rail Mounting Hardware Kit
- CD mit Handbuch und AZ Management Software
- Gedruckte Kurzanleitung

Please use only the power supply unit that is delivered with the device.
Bitte verwenden Sie nur das mitgelieferte Netzteil.

Den ALL-WAPC0435AC verbinden

1) Stellen Sie sicher dass Ihr Computer eine Ethernetkarte (RJ-45 Ethernet Port) besitzt. Für mehr Informationen vergleichen Sie dazu Ihr Benutzerhandbuch.
2) Verbinden Sie das eine Ende des Ethernet-Kabels der Kategorie 5e in den RJ-45-Port des ALL-WAPC0435AC und das andere Ende an den RJ-45-Anschluss am Computer, der den ALL-WAPC0435AC verwendet. Stellen Sie sicher, dass das Kabel richtig an dem ALL-WAPC0435AC und dem Computer angeschlossen ist.
3) Schließen Sie den DC Stecker des Netzteils an die **DC-IN** Buchse am ALL-WAPC0435AC und das Netzteil an den Stromanschluß. **Bitte verwenden Sie nur das mitgelieferte Netzteil!**

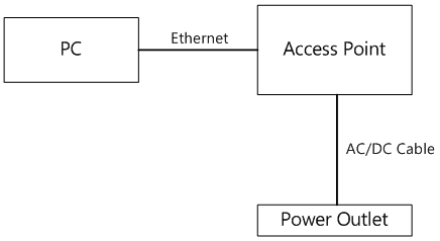

Hinweis: ALL-WAPC0435AC unterstützt sowohl IEEE 802.3af/at PoE (Power over Ethernet) als auch das reguläre Netzteil. Verwenden Sie eine von beiden Stromversorgungen. Bitte schließen Sie Beide nicht gleichzeitig an.

© ALLNET GmbH München 2015 - Alle Rechte vorbehalten

IP Adressen - Konfiguration

1) Stellen Sie sicher das der ALL-WAPC0435AC und ihr Computer eingeschaltet und miteinander verbunden sind
2) Für die nächsten Schritte sollten Sie gegeben falls auch in Ihrem Betriebssystemhandbuch nachschlagen.
3) Wenn Ihr Computer eingeschaltet ist, stellen Sie sicher das Ihr TCP/IP Protokoll eingerichtet und an ist. (In der Systemsteuerung, doppelklicken Sie auf Netzwerkverbindungen, und dann auf die Verbindung Ihrer Netzwerkkarte(NIC). Wählen Sie **Internet Protocol (TCP/IP)** aus und klicken Sie auf den **Eigenschaft** Button.
4) Wenn Ihr PC bereits in einem Netzwerk ist, stellen Sie sicher dass der Computer (oder die Ethernet Karte die mit dem ALL028850N verbunden ist) auf eine Statische IP Adresse von **192.168.1.2** und die Subnet Adress Maske auf **255.255.255.0** gesetzt ist. (Wählen Sie **Folgende IP Adresse verwenden** Option aus). Wenn dann Ihr dann Computer fertig vorbereitet ist, können Sie mit Konfiguration des ALL-WAPC0435AC beginnen.

ALL-WAPC0435AC Setup

1) Zum Konfigurieren des ALL-WAPC0435AC öffnen Sie einen Webbrowser (**z.B.:** Microsoft Internet Explorer, Mozilla Firefox, Google Chrome, etc.).
2) In der Adress-Leiste des Webbrowsers tippen Sie **192.168.1.1** (die Standard IP Adresse des ALL-WAPC0435AC) und drücken Sie Enter.

http://192.168.1.1

3) Ein Login-Bildschirm erscheint. Standardmäßig ist der Benutzername des ALL-WAPC0435AC **admin** und das Passwort **admin**. Geben Sie den aktuellen Benutzernamen und das Kennwort des ALL-WAPC0435AC und klicken Sie dann auf **Login.** Wie Sie den Benutzernamen und das Kennwort ändern können finden Sie im ALL-WAPC0435AC Handbuch.

4) Nach dem **Login** mit korrekten Benutzernamen und Kennwort erscheint das Hauptmenü des ALL-WAPC0435AC. Dann können Sie weiter mit dem Wireless Verbindungen des ALL-WAPC0435AC fortfahren

© ALLNET GmbH München 2015 - Alle Rechte vorbehalten

Konfiguration via Controller ALL-WAPC0450C

Navigieren Sie auf das Webinterface Ihres *ALL-WAPC0450C-Controllers*.

Der ALL-WAPC0435AC sollte nach 4-5 Scan-Intervallen automatisch vom Gerät erkannt und zur Einbindung angeboten werden.

Sollte das Gerät nicht erkannt werden, überprüfen Sie ob beide Geräte im selben Subnetz arbeiten.

Sollten Sie ohne DHCP-Server arbeiten, müssen die IP-Adressen manuell im selben Subnetz konfiguriert werden.

Konfiguration als eigenständiger Access Point

Hier sehen Sie eine Beispielkonfiguration als Access Point. Für weitere Konfiguration nutzen Sie bitte das auf der CD mitgelieferte Handbuch.

1) Klicken Sie auf **Wireless**. Anschließend sehen Sie die Übersicht über 2,4 GHz und 5 GHz.
2) Weiter zu **Operating Mode**: Wählen Sie den Operation Mode **Access Point** aus der Liste aus. Bestätigen Sie mit dem **Save** Button (scrollen Sie dazu zum Seitenende nach unten.).
3) Klicken Sie nun auf den Button **Edit** und erstellen Sie eine Verschlüsselungsart und ein WLAN-Passwort. Wir empfehlen Ihnen **WPA2/PSK mit AES**. Das Passwort muss mindesten 8 Zeichen betragen. Speichern Sie die Einstellungen mit **Save**.

Informationen zu den weiteren Betriebsmodi finden Sie im Benutzerhandbuch/User Manual für den ALL-WAPC0435AC unter **http://www.allnet.de/downloads.html**

© ALLNET GmbH München 2015 - Alle Rechte vorbehalten

Befestigung des ALL-WAPC0435AC

Der ALL-WAPC0435AC kann durch das mitgelieferte Montageset an Wand oder Decke befestigt werden.

Um den ALL-WAPC0435AC an einer Decke oder an der Wand mit der Halterung zu befestigen:

1) Befestigen Sie den Montage Ring mit den beiliegenden Montageschrauben an die Wand oder Decke.
2) Befestigen Sie die mitgelieferten kurzen Schrauben an den unteren Deckel des ALL-WAPC0435AC.

Lassen Sie die Schrauben genug rausstehen damit das Gerät noch an den Montage Ring befestigen werden kann.

Wenn mehr Platz benötigt wird, verwenden Sie die mitgelieferten Abstandshalter und langen Schrauben aus dem T-Schiene Montagekit, um den Abstand zwischen dem Gerät und der Halterung zu erhöhen.

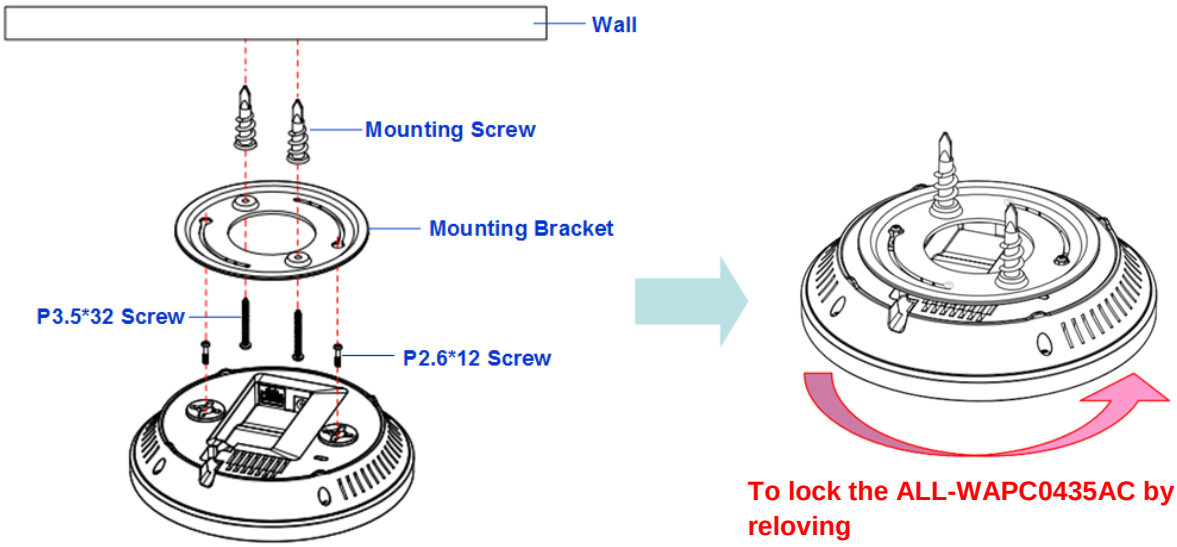

Montieren Sie den ALL-WAPC0435AC an die Halterung durch Drehen um 90° im Uhrzeigersinn, um ihn sicher zu fixieren.

© ALLNET GmbH München 2015 - Alle Rechte vorbehalten

Um die ALL-WAPC0435AC an einer Decke mit dem mitgelieferten T-Schiene-Anschlüssen zu verbinden:

1) Bringen Sie die T-Schiene-Anschlüsse unten an die Abdeckung des ALL-WAPC0435AC mit den mitgelieferten kurzen Schrauben an.

Zwei Größen von T-Schiene-Anschlüsse sind in der Montage-Hardware-Kit enthalten: hardware kit: 15/16in (2.38cm) and 9/16in (1.43cm).

Wenn mehr Abstand zu der Schiene benötigt wird können Sie die mitgelieferten Abstandshalter und langen Schrauben verwenden.

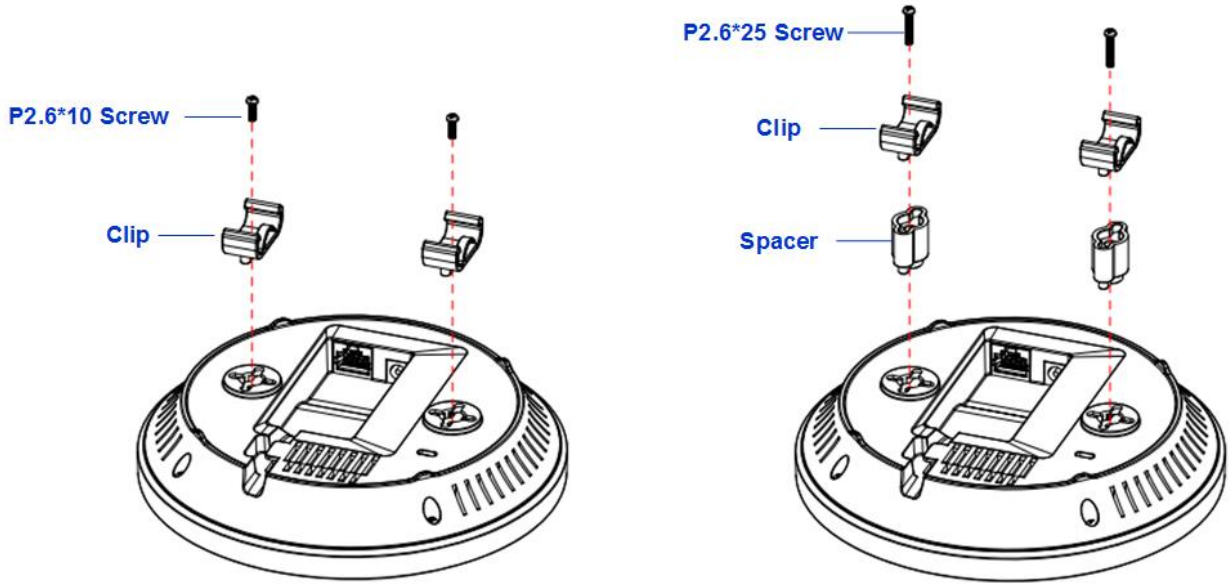

2) Setzen Sie die T-Schienen Verbinder an die passende T-Schiene und drücken Sie gegen den ALL-WAP0435AC bis die Verbinder in die Schiene einrasten.

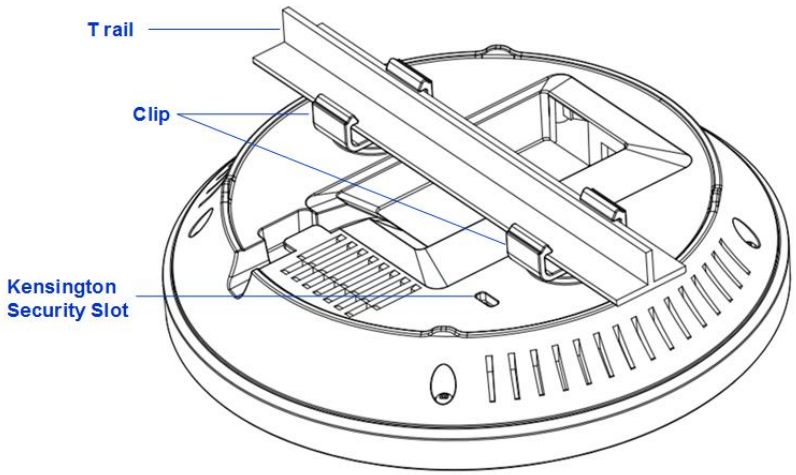

© ALLNET GmbH München 2015 - Alle Rechte vorbehalten

ALL-WAPC0435AC

Wireless AC Dual Band Access Point PoE

Quick Installation Guide

(english)

© ALLNET GmbH München 2015 - Alle Rechte vorbehalten

DEFAULT VALUES

IP:	**by DHCP**
Fallback IP:	**192.168.1.1**
User name:	**admin**
Password:	**admin**

Please change the default passwords after the final configuration for security reasons!

To download the user manual and the latest firmware refer to:

http://www.allnet.de/downloads.html

Take a look into the ALLNET Service Portal for more helpful guidance:

http://service.allnet.de/

© ALLNET GmbH München 2015 - Alle Rechte vorbehalten

Package content

Please verify contents of the box before continuing to set up the ALL-WAPC0435AC.

- ALL-WAPC0435AC Access Point
- 12V/2A 100V~240V Power Adaptor
- RJ-45 Ethernet Cable
- Mounting Bracket
- Wall/Ceiling Mounting Hardware Kit
- T-Rail Mounting Hardware Kit
- CD with User's Manual
- Printed Quick Install Guide

Please use only the power supply unit that is delivered with the device.

Connecting the ALL-WAPC0435AC

4) Ensure that the computer in use has an Ethernet Card (RJ-45 Ethernet Port). For more information, verify with User Manual.
5) Connect one end of the Category 5e Ethernet cable into RJ-45 port of the ALL-WAPC0435AC and the other end to the RJ-45 port on the computer that will use the ALL-WAPC0435AC. Ensure that the cable is securely connected to both the ALL-WAPC0435AC and the Computer.
6) Connect the Power DC Inlet to the **DC-IN** port of the ALL-WAPC0435AC and the Power to the electrical out. **Please use only the supplied power adapter!**

Note: ALL-WAPC0435AC supports both IEEE 802.3at PoE(Power over Ethernet) and regular power adapter. You should use either one as the power source. Please do not apply both at the same time.

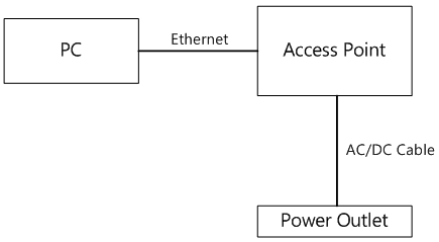

© ALLNET GmbH München 2015 - Alle Rechte vorbehalten

IP address configuration

5) After ensuring the ALL-WAPC0435AC device is powered on and plugged in, ensure that your computer is on.
6) For the next steps, refer to your Operating System User Manual.
7) Once your computer is on, ensure that your TCP/IP is set to **On** or **Enabled**. (In the control panel, double click Network Connections and then double click on the connection of your Network Interface Card (NIC). Select **Internet Protocol (TCP/IP)** and then click on the **Properties** button.)
8) If your PC is already on a computer network, ensure that you have set it to a Static IP Address on the interface (or Ethernet card that will use the ALL-WAPC0435AC) as **192.168.1.21** and the Subnet Mask address as **255.255.255.0**. (Select **Use the following IP Address** radio button). Once the computer has been prepared, proceed to setting up the ALL-WAPC0435AC.

ALL-WAPC0435AC Setup

5) To configure ALL-WAPC0435AC, open a web browser (**example:** Microsoft Internet Explorer, Mozilla Firefox, Google Chrome, etc.).
6) In the address bar of the web browser, enter **192.168.1.1** (the default IP address of the ALL-WAPC0435AC) and hit enter.

http://192.168.1.1

7) A login screen will appear. By default, the username of the ALL-WAPC0435AC is **admin** and the password is **admin**. Enter the current username and password of the ALL-WAPC0435AC and then click **Login**. Refer to the ALL-WAPC0435AC user manual on how to change the username and password.

8) After clicking **Login** with the correct username and password, the ALL-WAPC0435AC Main Menu will appear. If you are successful, proceed to setting up the wireless connection.

© ALLNET GmbH München 2015 - Alle Rechte vorbehalten

Configuration via controller ALL-WAPC0450C

Navigate to the web interface of your *ALL-WAPC0450C* controller.

The ALL-WAPC0435AC should be automatically recognized by the device after 4-5 scan intervals and offered for integration.

If the device is not recognized, check whether both devices are working in the same subnet.

If you work without DHCP server, the IP addresses must be configured manually in the same subnet.

Configuration as independent Access Point

This device can operate in the following modes: Access Point, WDS AP, WDS Bridge and Repeater.

A. Click on the **Wireless** under the navigation menu.

B. Navigate to **Operating Mode**. Select **Access Point** and then click on the **Save** button.

C. Navigate to your active SSID and click on the **Edit** button. A new window opens. Now select your favorite security authentication and enter an wireless password. (We recommend you to use **WPA2/PSK + AES**)

   Note: You will find more Information about the other Operating Mode's in the User Manual for ALL-WAPC0435AC. The User Manual is contained in the package content CD or downloadable at www.allnet.de/downloads.html

© ALLNET GmbH München 2015 - Alle Rechte vorbehalten

Mounting the ALL-WAPC0435AC

Using the provided hardware, the ALL-WAPC0435AC can be attached to a ceiling or wall.

To attach the ALL-WAPC0435AC to a ceiling or wall using the mounting bracket:

4) Attach the mounting bracket to the wall or ceiling using the provided wall/ceiling mounting hardware kit.
5) Insert the provided short screws into the bottom cover of the ALL-WAPC0435AC.

Leave enough of the screws exposed to ensure that the unit can be attached to the mounting bracket.

If extra space is required, use the provided spacers and long screws from the T-Rail mounting hardware kit to increase the space between the unit and the mounting bracket.

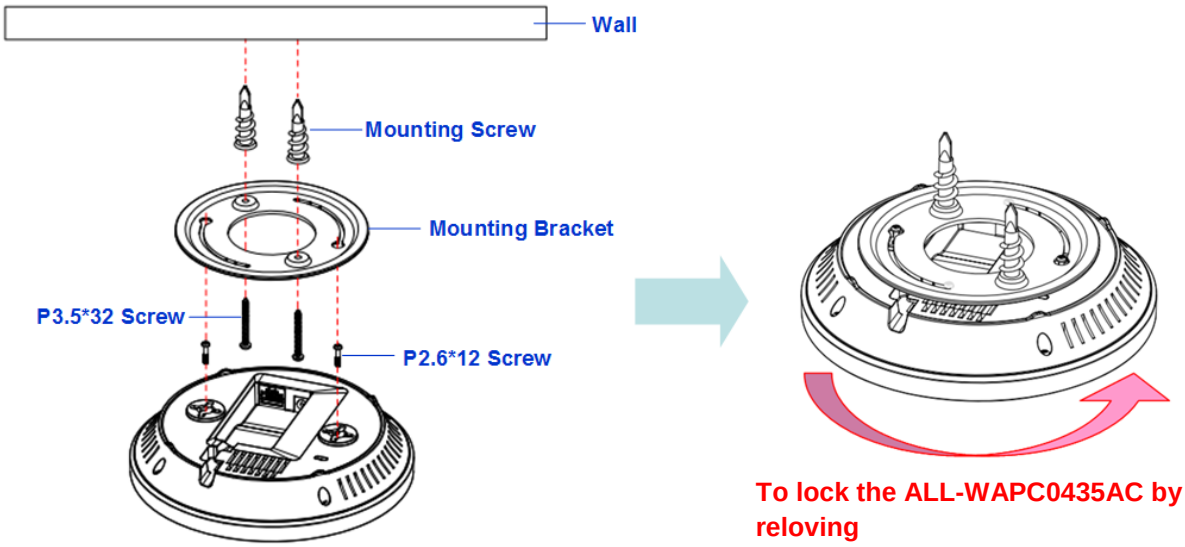

6) Mount the ALL-WAPC0435AC on the mounting bracket by rotating the unit clockwise about 90 degrees to secure it in place.

© ALLNET GmbH München 2015 - Alle Rechte vorbehalten

To attach the ALL-WAPC0435AC to a ceiling using the provided T-rail connectors:

3) Attach the T-rail connectors to the bottom cover of the ALL-WAPC0435AC using the provided short screws.

Two sizes of T-rail connectors are included in the mounting hardware kit: 15/16in (2.38cm) and 9/16in (1.43cm).

If extra space is required to accommodate drop ceiling tiles, use the provided spacers and long screws.

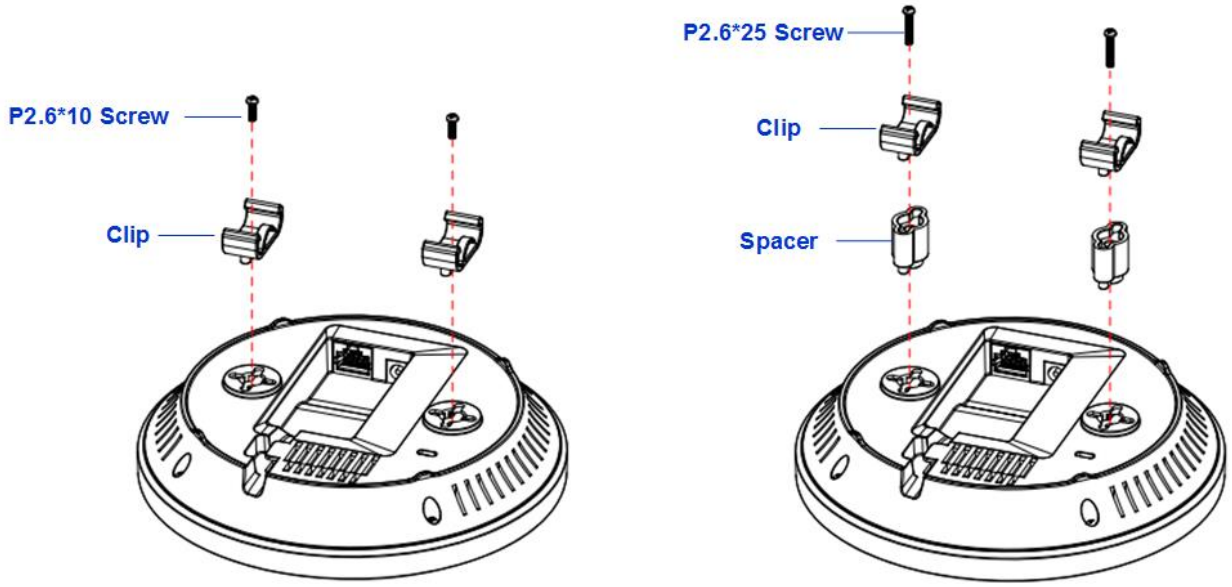

4) Line up the connected T-rail connectors with an appropriately sized rail and press the unit onto the rail until it snaps into place.

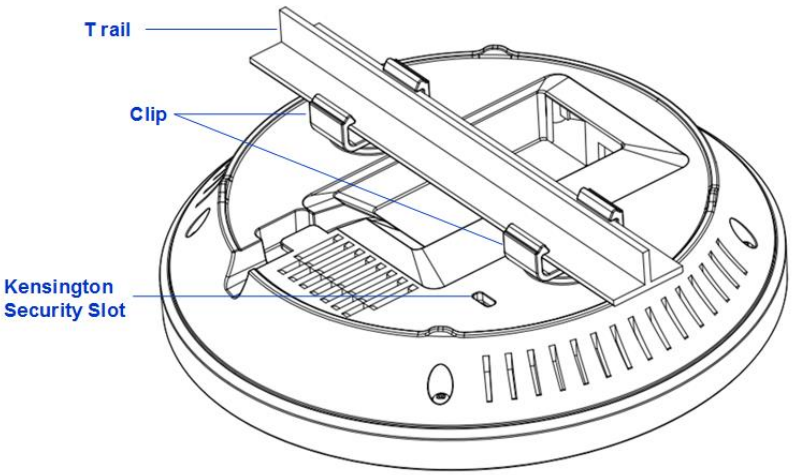

Note: To protect your ALL-WAPC0435AC, use the Kensington security slot to attach a cable lock (cable lock is not included).

© ALLNET GmbH München 2015 - Alle Rechte vorbehalten

Hiermit erklärt ALLNET GmbH Computersysteme, dass sich das Gerät **ALL-WAPC0435AC** in Übereinstimmung mit den grundlegenden Anforderungen und den übrigen einschlägigen Bestimmungen der Richtlinie 1999/5/EC oder 2014/53/EU befindet. Die Konformitätserklärung kann unter folgender Adresse gefunden werden: www.allnet.de/downloads.html

ALLNET GmbH Computersysteme declares that the device **ALL-WAPC0435AC** is in compliance with the essential requirements and other relevant provisions of Directive 1999/5/EC or 2014/53/EU. The Declaration of conformity can be found under this link: www.allnet.de/downloads.html

EU contact:

ALLNET GmbH Computersysteme
Maistrasse 2
82110 Germering

Tel. +49 (0)89 894 222 - 22
Fax +49 (0)89 894 222 - 33
Email: info(at)allnet.de

CE Marking is the symbol as shown on the top of this page. The letters "CE" are the abbreviation of French phrase "Conformity European" which literally means "European Conformity". The term initially used was "EC Mark" and it was officially replaced by "CE Marking" in the Directive 93/68/EEC in 1993. "CE Marking" is now used in all EU official documents.

This symbol on the product or on its packaging indicates that this product must not be disposed of with your other household waste. Instead, it is your responsibility to dispose of your waste equipment by handing it over it a designated collection point for the recycling of waste electrical and electronic equipment. The separate collection and recycling of your waste equipment at the time of disposal will help to conserve natural resources and ensure that it is recycled in a manner that protects human health and the environment. For more information abut where you can drop off your waste equipment for recycling, please contact your local city office, your household waste disposal service or the shop where you purchased the product.

© ALLNET GmbH München 2015 - Alle Rechte vorbehalten

This recycle logo Indicates that this product is capable of being recycled, not that the product has been recycled or will be accepted in all recycling collection systems.	

This symbol is **new RED** aligns the previous directive with the New Legislative Framework for the marketing of products. The revision takes account of the need for improved market surveillance, in particular for the traceability obligations of manufacturers, importers and distributors. It provides improved instruments for market surveillance, such as the possibility to require prior registration of radio equipment, within those categories affected by low levels of compliance.
The Directive requires **equipment to be constructed for efficient use of the radio spectrum, as well as electromagnetic compatibility, to avoid interference with terrestrial and orbital communications.**

The RoHS directive aims to restrict certain dangerous substances commonly used in electronic and electronic equipment. This RoHS compliant symbol indicate the component is tested for the presence of Lead (Pb), Cadmium (Cd), Mercury (Hg), Hexavalent chromium (Hex-Cr), Polybrominated biphenyls (PBB), and Polybrominated diphenyl ethers (PBDE). For Cadmium and Hexavalent chromium, there must be less than 0.01% of the substance by weight at raw homogeneous materials level. For Lead, PBB, and PBDE, there must be no more than 0.1% of the material, when calculated by weight at raw homogeneous materials. Any RoHS compliant component must have 100 ppm or less of mercury and the mercury must not have been intentionally added to the component.

© ALLNET GmbH München 2015 - Alle Rechte vorbehalten

⚠ Safety Warnings

For your safety, be sure to read and follow all warning notices and instructions.

- Do not open the device. Opening or removing the device cover can expose you to dangerous high voltage points or other risks. Only qualified service personnel can service the device. Please contact your vendor for further information.
- Do not use your device during a thunderstorm. There may be a risk of electric shock brought about by lightning.
- Do not expose your device to dust or corrosive liquids.
- Do not use this product near water sources.
- Make sure to connect the cables to the correct ports.
- Do not obstruct the ventilation slots on the device.

DISCLAIMER_OF_WARRANTY

This Program is free software; you can redistribute it and/or modify it under the terms of the GNU General Public License as published by the Free Software Foundation; version 2 of the License.

This Program is distributed in the hope that it will be useful, but WITHOUT ANY WARRANTY; without even the implied warranty of MERCHANTABILITY or FITNESS
FOR A PARTICULAR PURPOSE. See the GNU General Public License for more details.

You should have received a copy of the GNU General Public License along with this Program; if not, write to the Free Software Foundation, Inc., 59 Temple Place, Suite 330, Boston, MA 02111-1307 USA.

The full text of the GNU General Public License version 2 is included
with the software distribution in the file LICENSE.GPLv2

© ALLNET GmbH München 2015 - Alle Rechte vorbehalten

NO WARRANTY

BECAUSE THE PROGRAM IS LICENSED FREE OF CHARGE, THERE IS NO WARRANTY
FOR THE PROGRAM, TO THE EXTENT PERMITTED BY APPLICABLE LAW. EXCEPT WHEN
OTHERWISE STATED IN WRITING THE COPYRIGHT HOLDERS AND/OR OTHER PARTIES
PROVIDE THE PROGRAM "AS IS" WITHOUT WARRANTY OF ANY KIND, EITHER EXPRESSED
OR IMPLIED, INCLUDING, BUT NOT LIMITED TO, THE IMPLIED WARRANTIES OF
MERCHANTABILITY AND FITNESS FOR A PARTICULAR PURPOSE. THE ENTIRE RISK AS
TO THE QUALITY AND PERFORMANCE OF THE PROGRAM IS WITH YOU. SHOULD THE
PROGRAM PROVE DEFECTIVE, YOU ASSUME THE COST OF ALL NECESSARY SERVICING,
REPAIR OR CORRECTION.

IN NO EVENT UNLESS REQUIRED BY APPLICABLE LAW OR AGREED TO IN WRITING
WILL ANY COPYRIGHT HOLDER, OR ANY OTHER PARTY WHO MAY MODIFY AND/OR
REDISTRIBUTE THE PROGRAM AS PERMITTED ABOVE, BE LIABLE TO YOU FOR DAMAGES,
INCLUDING ANY GENERAL, SPECIAL, INCIDENTAL OR CONSEQUENTIAL DAMAGES ARISING
OUT OF THE USE OR INABILITY TO USE THE PROGRAM (INCLUDING BUT NOT LIMITED
TO LOSS OF DATA OR DATA BEING RENDERED INACCURATE OR LOSSES SUSTAINED BY
YOU OR THIRD PARTIES OR A FAILURE OF THE PROGRAM TO OPERATE WITH ANY OTHER
PROGRAMS), EVEN IF SUCH HOLDER OR OTHER PARTY HAS BEEN ADVISED OF THE
POSSIBILITY OF SUCH DAMAGES.

Written Offer for Source Code

For binaries that you receive from ALLNET GmbH Computersysteme on physical media or within the download of the offered firmware that are licensed under any version of the GNU General Public License (GPL) or the GNU LGPL, you can receive a complete machine-readable copy of the source code by sending a written request to:

ALLNET GmbH Computersysteme
Maistrasse 2
82110 Germering

© ALLNET GmbH München 2015 - Alle Rechte vorbehalten

Your request should include: (i) the name of the covered binary, (ii) the version number of the ALLNET product containing the covered binary, (iii) your name, (iv) your company name (if applicable) and (v) your return mailing and email address (if available). We may charge you a nominal fee to cover the cost of the media and distribution. Your request must be sent within three (3) years of the date you received the GPL or LGPL covered code. For your convenience, some or all of the source code may also be found at:

http://www.allnet.de/gpl.html

LICENSE.GPLv2

GNU GENERAL PUBLIC LICENSE
Version 2, June 1991

Copyright (C) 1989, 1991 Free Software Foundation, Inc. 51 Franklin Street, Fifth Floor, Boston, MA 02110-1301, USA Everyone is permitted to copy and distribute verbatim copies of this license document, but changing it is not allowed.

Preamble

The licenses for most software are designed to take away your freedom to share and change it. By contrast, the GNU General Public License is intended to guarantee your freedom to share and change free software--to make sure the software is free for all its users. This General Public License applies to most of the Free Software Foundation's software and to any other program whose authors commit to using it. (Some other Free Software Foundation software is covered by
the GNU Library General Public License instead.) You can apply it to your programs, too.

When we speak of free software, we are referring to freedom, not price. Our General Public Licenses are designed to make sure that you have the freedom to distribute copies of free software (and charge for this service if you wish), that you receive source code or can get it if you want it, that you can change the software or use pieces of it in new free programs; and that you know you can do these things.

To protect your rights, we need to make restrictions that forbid anyone to deny you these rights or to ask you to surrender the rights. These restrictions translate to certain responsibilities for you if you distribute copies of the software, or if you modify it.

For example, if you distribute copies of such a program, whether gratis or for a fee, you must give the recipients all the rights that you have. You must make sure that they, too, receive or can get the source code. And you must show them these terms so they know their rights.

© ALLNET GmbH München 2015 - Alle Rechte vorbehalten

We protect your rights with two steps: (1) copyright the software, and (2) offer you this license which gives you legal permission to copy, distribute and/or modify the software.

Also, for each author's protection and ours, we want to make certain that everyone understands that there is no warranty for this free software. If the software is modified by someone else and passed on, we want its recipients to know that what they have is not the original, so that any problems introduced by others will not reflect on the original authors' reputations.

Finally, any free program is threatened constantly by software patents. We wish to avoid the danger that redistributors of a free program will individually obtain patent licenses, in effect making the program proprietary. To prevent this, we have made it clear that any patent must be licensed for everyone's free use or not licensed at all.

The precise terms and conditions for copying, distribution and modification follow.

GNU GENERAL PUBLIC LICENSE
TERMS AND CONDITIONS FOR COPYING, DISTRIBUTION AND MODIFICATION

0. This License applies to any program or other work which contains a notice placed by the copyright holder saying it may be distributed under the terms of this General Public License. The "Program", below, refers to any such program or work, and a "work based on the Program" means either the Program or any derivative work under copyright law: that is to say, a work containing the Program or a portion of it, either verbatim or with modifications and/or translated into another language. (Hereinafter, translation is included without limitation in the term "modification".) Each licensee is addressed as "you".

Activities other than copying, distribution and modification are not covered by this License; they are outside its scope. The act of running the Program is not restricted, and the output from the Program is covered only if its contents constitute a work based on the Program (independent of having been made by running the Program). Whether that is true depends on what the Program does.

1. You may copy and distribute verbatim copies of the Program's source code as you receive it, in any medium, provided that you conspicuously and appropriately publish on each copy an appropriate copyright notice and disclaimer of warranty; keep intact all the notices that refer to this License and to the absence of any warranty; and give any other recipients of the Program a copy of this License
along with the Program.

You may charge a fee for the physical act of transferring a copy, and you may at your option offer warranty protection in exchange for a fee.

2. You may modify your copy or copies of the Program or any portion of it, thus

© ALLNET GmbH München 2015 - Alle Rechte vorbehalten

forming a work based on the Program, and copy and distribute such modifications or work under the terms of Section 1 above, provided that you also meet all of these conditions:

a) You must cause the modified files to carry prominent notices stating that you changed the files and the date of any change.

b) You must cause any work that you distribute or publish, that in whole or in part contains or is derived from the Program or any part thereof, to be licensed as a whole at no charge to all third parties under the terms of this License.

c) If the modified program normally reads commands interactively when run, you must cause it, when started running for such interactive use in the most ordinary way, to print or display an announcement including an appropriate copyright notice and a notice that there is no warranty (or else, saying that you provide a warranty) and that users may redistribute the program under these conditions, and telling the user how to view a copy of this License. (Exception: if the Program itself is interactive but does not normally print such an announcement, your work based on the Program is not required to print an announcement.)

These requirements apply to the modified work as a whole. If identifiable sections of that work are not derived from the Program, and can be reasonably considered independent and separate works in themselves, then this License, and its terms, do not apply to those sections when you distribute them as separate works. But when you distribute the same sections as part of a whole which is a work based
on the Program, the distribution of the whole must be on the terms of this License, whose permissions for other licensees extend to the entire whole, and thus to each and every part regardless of who wrote it.

Thus, it is not the intent of this section to claim rights or contest your rights to work written entirely by you; rather, the intent is to exercise the right to control the distribution of derivative or collective works based on the Program.

In addition, mere aggregation of another work not based on the Program with the Program (or with a work based on the Program) on a volume of a storage or distribution medium does not bring the other work under the scope of this License.

3. You may copy and distribute the Program (or a work based on it, under Section 2) in object code or executable form under the terms of Sections 1 and 2 above provided that you also do one of the following:

a) Accompany it with the complete corresponding machine-readable source code, which must be distributed under the terms of Sections and 2 above on a medium customarily used for software interchange; or,

© ALLNET GmbH München 2015 - Alle Rechte vorbehalten

b) Accompany it with a written offer, valid for at least three years, to give any third party, for a charge no more than your cost of physically performing source distribution, a complete machine-readable copy of the corresponding source code, to be distributed under the terms of Sections 1 and 2 above on a medium customarily used for software interchange; or,

c) Accompany it with the information you received as to the offer to distribute corresponding source code. (This alternative is allowed only for noncommercial distribution and only if you received the program in object code or executable form with such an offer, in accord with Subsection b above.)

The source code for a work means the preferred form of the work for making modifications to it. For an executable work, complete source code means all the source code for all modules it contains, plus any associated interface definition files, plus the scripts used to control compilation and installation of the executable. However, as a special exception, the source code distributed need not include
anything that is normally distributed (in either source or binary form) with the major components (compiler, kernel, and so on) of the operating system on which the executable runs, unless that component itself accompanies the executable.

If distribution of executable or object code is made by offering access to copy from a designated place, then offering equivalent access to copy the source code from the same place counts as distribution of the source code, even though third parties are not compelled to copy the source along with the object code.

4. You may not copy, modify, sublicense, or distribute the Program except as expressly provided under this License. Any attempt otherwise to copy, modify, sublicense or distribute the Program is void, and will automatically terminate your rights under this License. However, parties who have received copies, or rights, from you under this License will not have their licenses terminated so long as such parties remain in full compliance.

5. You are not required to accept this License, since you have not signed it. However, nothing else grants you permission to modify or distribute the Program or its derivative works. These actions are prohibited by law if you do not accept this License. Therefore, by modifying or distributing the Program (or any work based on the Program), you indicate your acceptance of this License to do so, and all its terms and conditions for copying, distributing or modifying the Program or works based on it.

6. Each time you redistribute the Program (or any work based on the Program), the recipient automatically receives a license from the original licensor to copy, distribute or modify the Program subject to these terms and conditions. You may not impose any further restrictions on the recipients' exercise of the rights granted herein.

© ALLNET GmbH München 2015 - Alle Rechte vorbehalten

You are not responsible for enforcing compliance by third parties to this License.

7. If, as a consequence of a court judgment or allegation of patent infringement or for any other reason (not limited to patent issues), conditions are imposed on you (whether by court order, agreement or otherwise) that contradict the conditions of this License, they do not excuse you from the conditions of this License. If you cannot distribute so as to satisfy simultaneously your obligations under this License and any other pertinent obligations, then as a consequence you may not distribute the Program at all. For example, if a patent license would not permit royalty-free redistribution of the Program by all those who receive copies directly or indirectly through you, then the only way you could satisfy both it and this License would be to refrain entirely from distribution of the Program.

If any portion of this section is held invalid or unenforceable under any particular circumstance, the balance of the section is intended to apply and the section as a whole is intended to apply in other circumstances.

It is not the purpose of this section to induce you to infringe any patents or other property right claims or to contest validity of any such claims; this section has the sole purpose of protecting the integrity of the free software distribution system, which is implemented by public license practices. Many people have made generous contributions to the wide range of software distributed through that system in reliance on consistent application of that system; it is up to the author/donor to decide if he or she is willing to distribute software through any other system and a licensee cannot impose that choice.

This section is intended to make thoroughly clear what is believed to be a consequence of the rest of this License.

8. If the distribution and/or use of the Program is restricted in certain countries either by patents or by copyrighted interfaces, the original copyright holder who places the Program under this License may add an explicit geographical distribution limitation excluding those countries, so that distribution is permitted only in or among countries not thus excluded. In such case, this License incorporates the limitation as if written in the body of this License.

9. The Free Software Foundation may publish revised and/or new versions of the General Public License from time to time. Such new versions will be similar in spirit to the present version, but may differ in detail to address new problems or concerns.

Each version is given a distinguishing version number. If the Program specifies a version number of this License which applies to it and "any

© ALLNET GmbH München 2015 - Alle Rechte vorbehalten

later version", you have the option of following the terms and conditions either of that version or of any later version published by the Free Software Foundation. If the Program does not specify a version number of this License, you may choose any version ever published by the Free Software Foundation.

10. If you wish to incorporate parts of the Program into other free programs whose distribution conditions are different, write to the author to ask for permission. For software which is copyrighted by the Free Software Foundation, write to the Free Software Foundation; we sometimes make exceptions for this. Our decision will be guided by the two goals of preserving the free status of all derivatives of our free software and of promoting the sharing and reuse of software generally.

NO WARRANTY

11. BECAUSE THE PROGRAM IS LICENSED FREE OF CHARGE, THERE IS NO WARRANTY
FOR THE PROGRAM, TO THE EXTENT PERMITTED BY APPLICABLE LAW. EXCEPT WHEN
OTHERWISE STATED IN WRITING THE COPYRIGHT HOLDERS AND/OR OTHER PARTIES
PROVIDE THE PROGRAM "AS IS" WITHOUT WARRANTY OF ANY KIND, EITHER EXPRESSED
OR IMPLIED, INCLUDING, BUT NOT LIMITED TO, THE IMPLIED WARRANTIES OF
MERCHANTABILITY AND FITNESS FOR A PARTICULAR PURPOSE. THE ENTIRE RISK AS
TO THE QUALITY AND PERFORMANCE OF THE PROGRAM IS WITH YOU. SHOULD THE
PROGRAM PROVE DEFECTIVE, YOU ASSUME THE COST OF ALL NECESSARY SERVICING,
REPAIR OR CORRECTION.

12. IN NO EVENT UNLESS REQUIRED BY APPLICABLE LAW OR AGREED TO IN WRITING
WILL ANY COPYRIGHT HOLDER, OR ANY OTHER PARTY WHO MAY MODIFY AND/OR
REDISTRIBUTE THE PROGRAM AS PERMITTED ABOVE, BE LIABLE TO YOU FOR DAMAGES,
INCLUDING ANY GENERAL, SPECIAL, INCIDENTAL OR CONSEQUENTIAL DAMAGES ARISING
OUT OF THE USE OR INABILITY TO USE THE PROGRAM (INCLUDING BUT NOT LIMITED
TO LOSS OF DATA OR DATA BEING RENDERED INACCURATE OR LOSSES SUSTAINED BY
YOU OR THIRD PARTIES OR A FAILURE OF THE PROGRAM TO OPERATE WITH ANY OTHER
PROGRAMS), EVEN IF SUCH HOLDER OR OTHER PARTY HAS BEEN ADVISED OF THE
POSSIBILITY OF SUCH DAMAGES.

© ALLNET GmbH München 2015 - Alle Rechte vorbehalten

END OF TERMS AND CONDITIONS

How to Apply These Terms to Your New Programs

If you develop a new program, and you want it to be of the greatest possible use to the public, the best way to achieve this is to make it free software which everyone can redistribute and change under these terms.

To do so, attach the following notices to the program. It is safest to attach them to the start of each source file to most effectively convey the exclusion of warranty; and each file should have at least the "copyright" line and a pointer to where the full notice is found.

<one line to give the program's name and a brief idea of what it does.>
Copyright (C) <year> <name of author>

This program is free software; you can redistribute it and/or modify it under the terms of the GNU General Public License as published by the Free Software Foundation; either version 2 of the License, or (at your option) any later version.

This program is distributed in the hope that it will be useful, but WITHOUT ANY WARRANTY; without even the implied warranty of MERCHANTABILITY or FITNESS FOR A PARTICULAR PURPOSE. See the GNU General Public License for more details.

You should have received a copy of the GNU General Public License along with this program; if not, write to the Free Software Foundation, Inc., 51 Franklin Street, Fifth Floor, Boston, MA 02110-1301, USA

Also add information on how to contact you by electronic and paper mail.

If the program is interactive, make it output a short notice like this when it starts in an interactive mode:

Gnomovision version 69, Copyright (C) year name of author
Gnomovision comes with ABSOLUTELY NO WARRANTY; for details type `show w'.
This is free software, and you are welcome to redistribute it under certain conditions; type `show c' for details.

The hypothetical commands `show w' and `show c' should show the appropriate parts of the General Public License. Of course, the commands you use may be called something other than `show w' and `show c'; they could even be mouse-clicks or menu items--whatever suits your program.

You should also get your employer (if you work as a programmer) or your school, if any, to sign a "copyright disclaimer" for the program, if

© ALLNET GmbH München 2015 - Alle Rechte vorbehalten

necessary. Here is a sample; alter the names:

Yoyodyne, Inc., hereby disclaims all copyright interest in the program
`Gnomovision' (which makes passes at compilers) written by James Hacker.

<signature of Ty Coon>, 1 April 1989
Ty Coon, President of Vice

This General Public License does not permit incorporating your program into proprietary programs. If your program is a subroutine library, you may consider it more useful to permit linking proprietary applications with the library. If this is what you want to do, use the GNU Lesser General Public License instead of this License.

LICENSE.LGPLv2.1

GNU LESSER GENERAL PUBLIC LICENSE
Version 2.1, February 1999

Copyright (C) 1991, 1999 Free Software Foundation, Inc.
51 Franklin Street, Fifth Floor, Boston, MA 02110-1301 USA
Everyone is permitted to copy and distribute verbatim copies
of this license document, but changing it is not allowed.

[This is the first released version of the Lesser GPL. It also counts as the successor of the GNU Library Public License, version 2, hence the version number 2.1.]

Preamble

The licenses for most software are designed to take away your freedom to share and change it. By contrast, the GNU General Public Licenses are intended to guarantee your freedom to share and change free software--to make sure the software is free for all its users.

This license, the Lesser General Public License, applies to some specially designated software packages--typically libraries--of the Free Software Foundation and other authors who decide to use it. You can use it too, but we suggest you first think carefully about whether this license or the ordinary General Public License is the better strategy to use in any particular case, based on the explanations below.

When we speak of free software, we are referring to freedom of use, not price. Our General Public Licenses are designed to make sure that you have the freedom to distribute copies of free software (and charge for this service if you wish); that you receive source code or can get it if you want it; that you can change the software and use pieces of it in new free programs; and that you are informed that you can do these things.

To protect your rights, we need to make restrictions that forbid distributors to deny you these rights or to ask you to surrender these rights. These restrictions translate to certain responsibilities for you if you distribute copies of the library or if you modify it.

For example, if you distribute copies of the library, whether gratis or for a fee, you must give the recipients all the rights that we gave you. You must make sure that they, too, receive or can get the source code. If you link other code with the library, you must provide complete object files to the recipients, so that they can relink them with the library after making changes to the library and recompiling it. And you must show them these terms so they know their rights.

We protect your rights with a two-step method: (1) we copyright the library, and (2) we offer you this license, which gives you legal permission to copy, distribute and/or modify the library.

To protect each distributor, we want to make it very clear that there is no warranty for the free library. Also, if the library is modified by someone else and passed on, the recipients should know that what they have is not the original version, so that the original author's reputation will not be affected by problems that might be introduced by others.

Finally, software patents pose a constant threat to the existence of any free program. We wish to make sure that a company cannot effectively restrict the users of a free program by obtaining a restrictive license from a patent holder. Therefore, we insist that any patent license obtained for a version of the library must be consistent with the full freedom of use specified in this license.

Most GNU software, including some libraries, is covered by the ordinary GNU General Public License. This license, the GNU Lesser General Public License, applies to certain designated libraries, and is quite different from the ordinary General Public License. We use this license for certain libraries in order to permit linking those libraries into non-free programs.

When a program is linked with a library, whether statically or using a shared library, the combination of the two is legally speaking a combined work, a derivative of the original library. The ordinary General Public License therefore permits such linking only if the entire combination fits its criteria of freedom. The Lesser General Public License permits more lax criteria for linking other code with the library.

We call this license the "Lesser" General Public License because it does Less to protect the user's freedom than the ordinary General Public License. It also provides other free software developers Less

© ALLNET GmbH München 2015 - Alle Rechte vorbehalten

of an advantage over competing non-free programs. These disadvantages are the reason we use the ordinary General Public License for many libraries. However, the Lesser license provides advantages in certain special circumstances.

For example, on rare occasions, there may be a special need to encourage the widest possible use of a certain library, so that it becomes a de-facto standard. To achieve this, non-free programs must be allowed to use the library. A more frequent case is that a free library does the same job as widely used non-free libraries. In this case, there is little to gain by limiting the free library to free software only, so we use the Lesser General Public License.

In other cases, permission to use a particular library in non-free programs enables a greater number of people to use a large body of free software. For example, permission to use the GNU C Library in non-free programs enables many more people to use the whole GNU operating system, as well as its variant, the GNU/Linux operating system.

Although the Lesser General Public License is Less protective of the users' freedom, it does ensure that the user of a program that is linked with the Library has the freedom and the wherewithal to run that program using a modified version of the Library.

The precise terms and conditions for copying, distribution and modification follow. Pay close attention to the difference between a "work based on the library" and a "work that uses the library". The former contains code derived from the library, whereas the latter must be combined with the library in order to run.

GNU LESSER GENERAL PUBLIC LICENSE
TERMS AND CONDITIONS FOR COPYING, DISTRIBUTION AND MODIFICATION

0. This License Agreement applies to any software library or other program which contains a notice placed by the copyright holder or other authorized party saying it may be distributed under the terms of this Lesser General Public License (also called "this License").
Each licensee is addressed as "you".

A "library" means a collection of software functions and/or data prepared so as to be conveniently linked with application programs (which use some of those functions and data) to form executables.

The "Library", below, refers to any such software library or work which has been distributed under these terms. A "work based on the Library" means either the Library or any derivative work under copyright law: that is to say, a work containing the Library or a portion of it, either verbatim or with modifications and/or translated straightforwardly into another language. (Hereinafter, translation is

© ALLNET GmbH München 2015 - Alle Rechte vorbehalten

included without limitation in the term "modification".)

"Source code" for a work means the preferred form of the work for making modifications to it. For a library, complete source code means all the source code for all modules it contains, plus any associated interface definition files, plus the scripts used to control compilation and installation of the library.

Activities other than copying, distribution and modification are not covered by this License; they are outside its scope. The act of running a program using the Library is not restricted, and output from such a program is covered only if its contents constitute a work based on the Library (independent of the use of the Library in a tool for writing it). Whether that is true depends on what the Library does and what the program that uses the Library does.

1. You may copy and distribute verbatim copies of the Library's complete source code as you receive it, in any medium, provided that you conspicuously and appropriately publish on each copy an appropriate copyright notice and disclaimer of warranty; keep intact all the notices that refer to this License and to the absence of any warranty; and distribute a copy of this License along with the Library.

You may charge a fee for the physical act of transferring a copy, and you may at your option offer warranty protection in exchange for a fee.

2. You may modify your copy or copies of the Library or any portion of it, thus forming a work based on the Library, and copy and distribute such modifications or work under the terms of Section 1 above, provided that you also meet all of these conditions:

a) The modified work must itself be a software library.

b) You must cause the files modified to carry prominent notices stating that you changed the files and the date of any change.

c) You must cause the whole of the work to be licensed at no charge to all third parties under the terms of this License.

d) If a facility in the modified Library refers to a function or a table of data to be supplied by an application program that uses the facility, other than as an argument passed when the facility is invoked, then you must make a good faith effort to ensure that, in the event an application does not supply such function or table, the facility still operates, and performs whatever part of its purpose remains meaningful.

(For example, a function in a library to compute square roots has

© ALLNET GmbH München 2015 - Alle Rechte vorbehalten

a purpose that is entirely well-defined independent of the application. Therefore, Subsection 2d requires that any application-supplied function or table used by this function must be optional: if the application does not supply it, the square root function must still compute square roots.)

These requirements apply to the modified work as a whole. If identifiable sections of that work are not derived from the Library, and can be reasonably considered independent and separate works in themselves, then this License, and its terms, do not apply to those sections when you distribute them as separate works. But when you distribute the same sections as part of a whole which is a work based on the Library, the distribution of the whole must be on the terms of this License, whose permissions for other licensees extend to the entire whole, and thus to each and every part regardless of who wrote it.

Thus, it is not the intent of this section to claim rights or contest your rights to work written entirely by you; rather, the intent is to exercise the right to control the distribution of derivative or collective works based on the Library.

In addition, mere aggregation of another work not based on the Library with the Library (or with a work based on the Library) on a volume of a storage or distribution medium does not bring the other work under the scope of this License.

3. You may opt to apply the terms of the ordinary GNU General Public License instead of this License to a given copy of the Library. To do this, you must alter all the notices that refer to this License, so that they refer to the ordinary GNU General Public License, version 2, instead of to this License. (If a newer version than version 2 of the ordinary GNU General Public License has appeared, then you can specify that version instead if you wish.) Do not make any other change in these notices.

Once this change is made in a given copy, it is irreversible for that copy, so the ordinary GNU General Public License applies to all subsequent copies and derivative works made from that copy.

This option is useful when you wish to copy part of the code of the Library into a program that is not a library.

4. You may copy and distribute the Library (or a portion or derivative of it, under Section 2) in object code or executable form under the terms of Sections 1 and 2 above provided that you accompany it with the complete corresponding machine-readable source code, which must be distributed under the terms of Sections 1 and 2 above on a medium customarily used for software interchange.

© ALLNET GmbH München 2015 - Alle Rechte vorbehalten

If distribution of object code is made by offering access to copy from a designated place, then offering equivalent access to copy the source code from the same place satisfies the requirement to distribute the source code, even though third parties are not compelled to copy the source along with the object code.

5. A program that contains no derivative of any portion of the Library, but is designed to work with the Library by being compiled or linked with it, is called a "work that uses the Library". Such a work, in isolation, is not a derivative work of the Library, and therefore falls outside the scope of this License.

However, linking a "work that uses the Library" with the Library creates an executable that is a derivative of the Library (because it contains portions of the Library), rather than a "work that uses the library". The executable is therefore covered by this License. Section 6 states terms for distribution of such executables.

When a "work that uses the Library" uses material from a header file that is part of the Library, the object code for the work may be a derivative work of the Library even though the source code is not. Whether this is true is especially significant if the work can be linked without the Library, or if the work is itself a library. The threshold for this to be true is not precisely defined by law.

If such an object file uses only numerical parameters, data structure layouts and accessors, and small macros and small inline functions (ten lines or less in length), then the use of the object file is unrestricted, regardless of whether it is legally a derivative work. (Executables containing this object code plus portions of the Library will still fall under Section 6.)

Otherwise, if the work is a derivative of the Library, you may distribute the object code for the work under the terms of Section 6. Any executables containing that work also fall under Section 6, whether or not they are linked directly with the Library itself.

6. As an exception to the Sections above, you may also combine or link a "work that uses the Library" with the Library to produce a work containing portions of the Library, and distribute that work under terms of your choice, provided that the terms permit modification of the work for the customer's own use and reverse engineering for debugging such modifications.

You must give prominent notice with each copy of the work that the Library is used in it and that the Library and its use are covered by this License. You must supply a copy of this License. If the work during execution displays copyright notices, you must include the copyright notice for the Library among them, as well as a reference directing the user to the copy of this License. Also, you must do one

© ALLNET GmbH München 2015 - Alle Rechte vorbehalten

of these things:

a) Accompany the work with the complete corresponding machine-readable source code for the Library including whatever changes were used in the work (which must be distributed under Sections 1 and 2 above); and, if the work is an executable linked with the Library, with the complete machine-readable "work that uses the Library", as object code and/or source code, so that the user can modify the Library and then relink to produce a modified executable containing the modified Library. (It is understood that the user who changes the contents of definitions files in the Library will not necessarily be able to recompile the application to use the modified definitions.)

b) Use a suitable shared library mechanism for linking with the Library. A suitable mechanism is one that (1) uses at run time a copy of the library already present on the user's computer system, rather than copying library functions into the executable, and (2) will operate properly with a modified version of the library, if the user installs one, as long as the modified version is interface-compatible with the version that the work was made with.

c) Accompany the work with a written offer, valid for at least three years, to give the same user the materials specified in Subsection 6a, above, for a charge no more than the cost of performing this distribution.

d) If distribution of the work is made by offering access to copy from a designated place, offer equivalent access to copy the above specified materials from the same place.

e) Verify that the user has already received a copy of these materials or that you have already sent this user a copy.

For an executable, the required form of the "work that uses the Library" must include any data and utility programs needed for reproducing the executable from it. However, as a special exception, the materials to be distributed need not include anything that is normally distributed (in either source or binary form) with the major components (compiler, kernel, and so on) of the operating system on which the executable runs, unless that component itself accompanies the executable.

It may happen that this requirement contradicts the license restrictions of other proprietary libraries that do not normally accompany the operating system. Such a contradiction means you cannot use both them and the Library together in an executable that you distribute.

7. You may place library facilities that are a work based on the

© ALLNET GmbH München 2015 - Alle Rechte vorbehalten

Library side-by-side in a single library together with other library facilities not covered by this License, and distribute such a combined library, provided that the separate distribution of the work based on the Library and of the other library facilities is otherwise permitted, and provided that you do these two things:

a) Accompany the combined library with a copy of the same work based on the Library, uncombined with any other library facilities. This must be distributed under the terms of the Sections above.

b) Give prominent notice with the combined library of the fact that part of it is a work based on the Library, and explaining where to find the accompanying uncombined form of the same work.

8. You may not copy, modify, sublicense, link with, or distribute the Library except as expressly provided under this License. Any attempt otherwise to copy, modify, sublicense, link with, or distribute the Library is void, and will automatically terminate your rights under this License. However, parties who have received copies, or rights, from you under this License will not have their licenses terminated so long as such parties remain in full compliance.

9. You are not required to accept this License, since you have not signed it. However, nothing else grants you permission to modify or distribute the Library or its derivative works. These actions are prohibited by law if you do not accept this License. Therefore, by modifying or distributing the Library (or any work based on the Library), you indicate your acceptance of this License to do so, and all its terms and conditions for copying, distributing or modifying the Library or works based on it.

10. Each time you redistribute the Library (or any work based on the Library), the recipient automatically receives a license from the original licensor to copy, distribute, link with or modify the Library subject to these terms and conditions. You may not impose any further restrictions on the recipients' exercise of the rights granted herein. You are not responsible for enforcing compliance by third parties with this License.

11. If, as a consequence of a court judgment or allegation of patent infringement or for any other reason (not limited to patent issues), conditions are imposed on you (whether by court order, agreement or otherwise) that contradict the conditions of this License, they do not excuse you from the conditions of this License. If you cannot distribute so as to satisfy simultaneously your obligations under this License and any other pertinent obligations, then as a consequence you may not distribute the Library at all. For example, if a patent license would not permit royalty-free redistribution of the Library by all those who receive copies directly or indirectly through you, then

© ALLNET GmbH München 2015 - Alle Rechte vorbehalten

the only way you could satisfy both it and this License would be to refrain entirely from distribution of the Library.

If any portion of this section is held invalid or unenforceable under any particular circumstance, the balance of the section is intended to apply, and the section as a whole is intended to apply in other circumstances.

It is not the purpose of this section to induce you to infringe any patents or other property right claims or to contest validity of any such claims; this section has the sole purpose of protecting the integrity of the free software distribution system which is implemented by public license practices. Many people have made generous contributions to the wide range of software distributed through that system in reliance on consistent application of that system; it is up to the author/donor to decide if he or she is willing to distribute software through any other system and a licensee cannot impose that choice.

This section is intended to make thoroughly clear what is believed to be a consequence of the rest of this License.

12. If the distribution and/or use of the Library is restricted in certain countries either by patents or by copyrighted interfaces, the original copyright holder who places the Library under this License may add an explicit geographical distribution limitation excluding those countries, so that distribution is permitted only in or among countries not thus excluded. In such case, this License incorporates the limitation as if written in the body of this License.

13. The Free Software Foundation may publish revised and/or new versions of the Lesser General Public License from time to time. Such new versions will be similar in spirit to the present version, but may differ in detail to address new problems or concerns.

Each version is given a distinguishing version number. If the Library specifies a version number of this License which applies to it and "any later version", you have the option of following the terms and conditions either of that version or of any later version published by the Free Software Foundation. If the Library does not specify a license version number, you may choose any version ever published by the Free Software Foundation.

14. If you wish to incorporate parts of the Library into other free programs whose distribution conditions are incompatible with these, write to the author to ask for permission. For software which is copyrighted by the Free Software Foundation, write to the Free Software Foundation; we sometimes make exceptions for this. Our decision will be guided by the two goals of preserving the free status of all derivatives of our free software and of promoting the sharing and reuse of software generally.

© ALLNET GmbH München 2015 - Alle Rechte vorbehalten

NO WARRANTY

15. BECAUSE THE LIBRARY IS LICENSED FREE OF CHARGE, THERE IS NO WARRANTY FOR THE LIBRARY, TO THE EXTENT PERMITTED BY APPLICABLE LAW.
EXCEPT WHEN OTHERWISE STATED IN WRITING THE COPYRIGHT HOLDERS AND/OR
OTHER PARTIES PROVIDE THE LIBRARY "AS IS" WITHOUT WARRANTY OF ANY KIND, EITHER EXPRESSED OR IMPLIED, INCLUDING, BUT NOT LIMITED TO, THE IMPLIED WARRANTIES OF MERCHANTABILITY AND FITNESS FOR A PARTICULAR PURPOSE. THE ENTIRE RISK AS TO THE QUALITY AND PERFORMANCE OF THE LIBRARY IS WITH YOU. SHOULD THE LIBRARY PROVE DEFECTIVE, YOU ASSUME THE COST OF ALL NECESSARY SERVICING, REPAIR OR CORRECTION.

16. IN NO EVENT UNLESS REQUIRED BY APPLICABLE LAW OR AGREED TO IN WRITING WILL ANY COPYRIGHT HOLDER, OR ANY OTHER PARTY WHO MAY MODIFY
AND/OR REDISTRIBUTE THE LIBRARY AS PERMITTED ABOVE, BE LIABLE TO YOU FOR DAMAGES, INCLUDING ANY GENERAL, SPECIAL, INCIDENTAL OR CONSEQUENTIAL DAMAGES ARISING OUT OF THE USE OR INABILITY TO USE THE LIBRARY (INCLUDING BUT NOT LIMITED TO LOSS OF DATA OR DATA BEING RENDERED INACCURATE OR LOSSES SUSTAINED BY YOU OR THIRD PARTIES OR A
FAILURE OF THE LIBRARY TO OPERATE WITH ANY OTHER SOFTWARE), EVEN IF SUCH HOLDER OR OTHER PARTY HAS BEEN ADVISED OF THE POSSIBILITY OF SUCH
DAMAGES.

END OF TERMS AND CONDITIONS

How to Apply These Terms to Your New Libraries

If you develop a new library, and you want it to be of the greatest possible use to the public, we recommend making it free software that everyone can redistribute and change. You can do so by permitting redistribution under these terms (or, alternatively, under the terms of the ordinary General Public License).

To apply these terms, attach the following notices to the library. It is safest to attach them to the start of each source file to most effectively convey the exclusion of warranty; and each file should have at least the "copyright" line and a pointer to where the full notice is found.

<one line to give the library's name and a brief idea of what it does.>
Copyright (C) <year> <name of author>

This library is free software; you can redistribute it and/or
modify it under the terms of the GNU Lesser General Public
License as published by the Free Software Foundation; either

© ALLNET GmbH München 2015 - Alle Rechte vorbehalten

version 2.1 of the License, or (at your option) any later version.

This library is distributed in the hope that it will be useful,
but WITHOUT ANY WARRANTY; without even the implied warranty of
MERCHANTABILITY or FITNESS FOR A PARTICULAR PURPOSE. See the GNU
Lesser General Public License for more details.

You should have received a copy of the GNU Lesser General Public
License along with this library; if not, write to the Free Software
Foundation, Inc., 51 Franklin Street, Fifth Floor, Boston, MA 02110-1301 USA

Also add information on how to contact you by electronic and paper mail.

You should also get your employer (if you work as a programmer) or your
school, if any, to sign a "copyright disclaimer" for the library, if
necessary. Here is a sample; alter the names:

Yoyodyne, Inc., hereby disclaims all copyright interest in the
library `Frob' (a library for tweaking knobs) written by James Random Hacker.

<signature of Ty Coon>, 1 April 1990
Ty Coon, President of Vice

That's all there is to it!

© ALLNET GmbH München 2015 - Alle Rechte vorbehalten