Telco 50 cable (25 pairs)

Pair 1 2 3 4 5 6 7 8 9 10 11 12 13 14 15 16 17 18 19 20 21 22 23 24 25

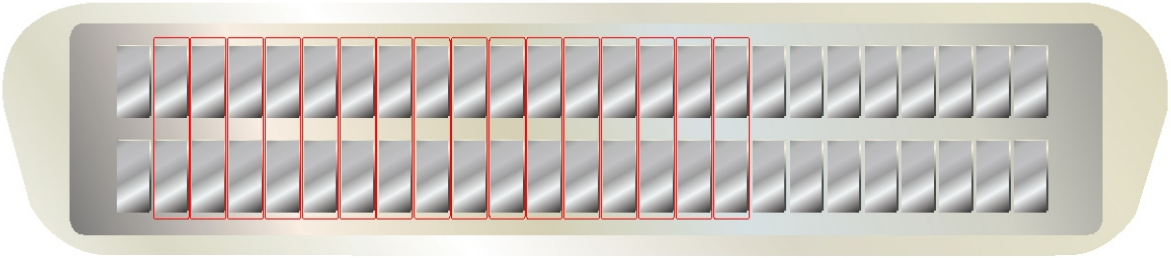

Port 1 2 3 4 5 6 7 8 9 10 11 12 13 14 15 16

NOTE For the above illustration, pair 2 is as port 1 until the pair 17 to port 16.
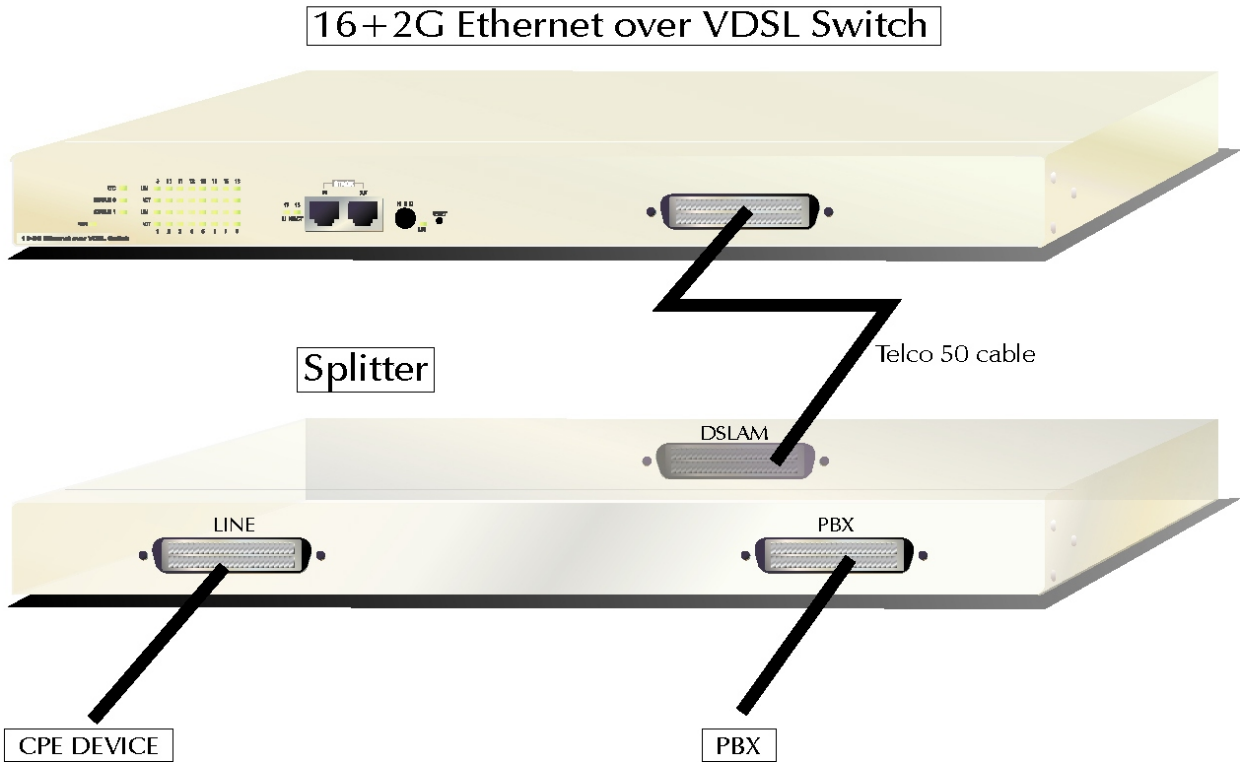
Application