ALL4780-2Wire-SFP-Set

ALLNET Switch Modul ALL4780 SFP(Mini-GBIC), 2Wire-Set, max. 100Mbit

- *Industry Standard Small Form-Factor Pluggable (MSA compliant)*
- *Provide 100/100 Mbps up to 500m over CAT 5e*
- *Configurable SNR profile for noisy environment*
- *Industrial rated for –20°C to 75°C operation*

Part No. 141113

Note: Product specification is subject to change without notice.

Description

ALLNET ALL4780-2Wire-SFP-Set is an integrated SFP bridge modem, a MSA compliant Small-Form Factor Pluggable module that enables traditional Ethernet switch, media converter and other network appliances to connect beyond typical Ethernet coverage (100 meters). Incorporated with the latest VDSL2 technology, this SFP modem can be easily adapted to existing applications with existing 2-wire cable, such as phone line, to avoid the cost of rewiring. It can drastically extend the Ethernet service on UTP wire with distance up to 3000 meters, and even with the rate of 100Mbps speed up to 400 meters on a standard Cat 5e 2 wire cable.

The SFP modem is also designed with flexible profiles settings for system integrator, or user, to select based on their unique applications and environment requirements. Symmetric profile can be applied as a standard Ethernet connection while Asymmetric profile can be used for other services like Video streaming or IP surveillance services which require high traffic flow in an uni-direction configuration. The SFP modem also supports Telco grade noise cancellation techniques like Interleave, high SNR profile, and retransmission that can effectively eliminate the noise impact to ensure your service/control messages can securely deliver in a harsh environment.

With long reach coverage, high noise immunity, and compact board size, ALLNET ALL4780-2Wire-SFP-Set SFP modem is an ideal upgrade for your Enterprise or Industry applications.

Specifications

Hardware	RJ-45 (LRE Port) SERDES connect to host LED 1 (CO/ CPE indicator) LED 2 (PWR/ Link Status indicator)
Software	Self Boot & Managed by Internal Flash Linux driver for managed devices

Power Requirement		3.3v , 700mA
Environment	Operating Temperature	-20 ~ +75°C
	Storage Temperature	-40 ~ +85°C
	Operating Humidity	5% to 90% (non-condensed)
	Storage Humidity	5% to 95% (non-condensed)
	ESD Standards	Contact: +/-4KV Air:+/-8KV (EN 61000-4-2)
	Radiated RFI Standards	Strength:10V/m (EN 61000-4-3)
	EFT/BURST Standards	Power:2KV Signal:1KV (EN 61000-4-4)
	Surge Immunity Standards	Power:2KV Signal:1KV (EN 61000-4-5)
Certification		CE / FCC

Note: Product specification is subject to change without notice.

Performance

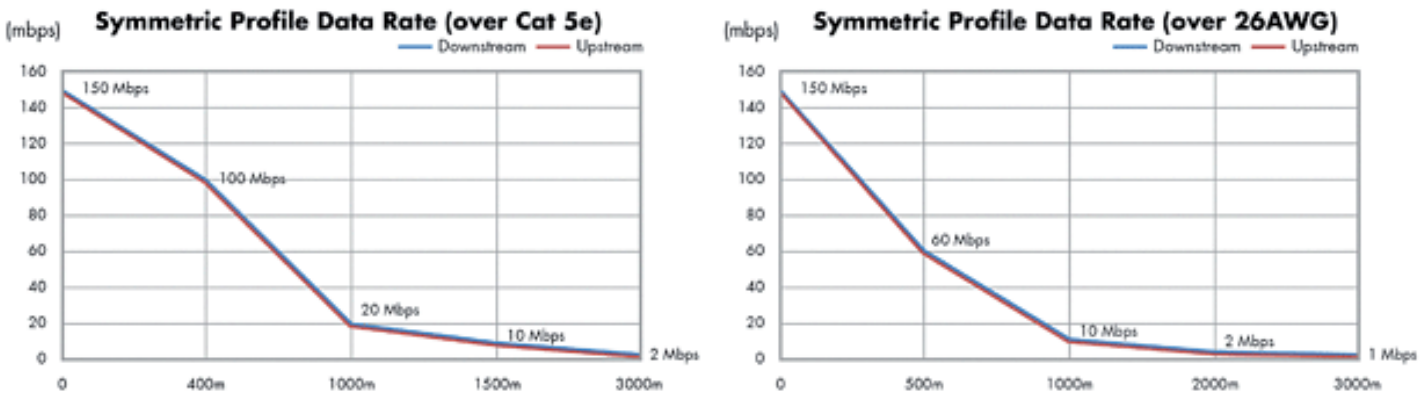

Order Information

Model Specification	ALL4780-C	ALL4780-R
Interface	SFP Complaint	SFP Complaint
Description	CO side	CPE side
Performance	300Mbps (Aggregate rate)	

Dimensions in mm

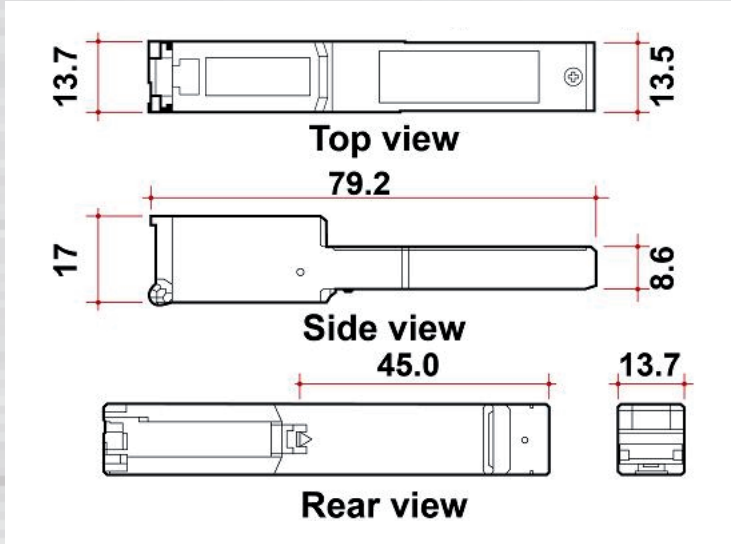

Note: Product specification is subject to change without notice.